A & M Electric Tools

Ind	Product No.	Type	Voltage	Country
a	4000384100	PPH26RA	220-240V	IN2

Rotary Hammers

Milwaukee

PPH 26 RA

Exp.view No.	Version	Date	Page
4926 3841 02	0005	02.09.04	1/3

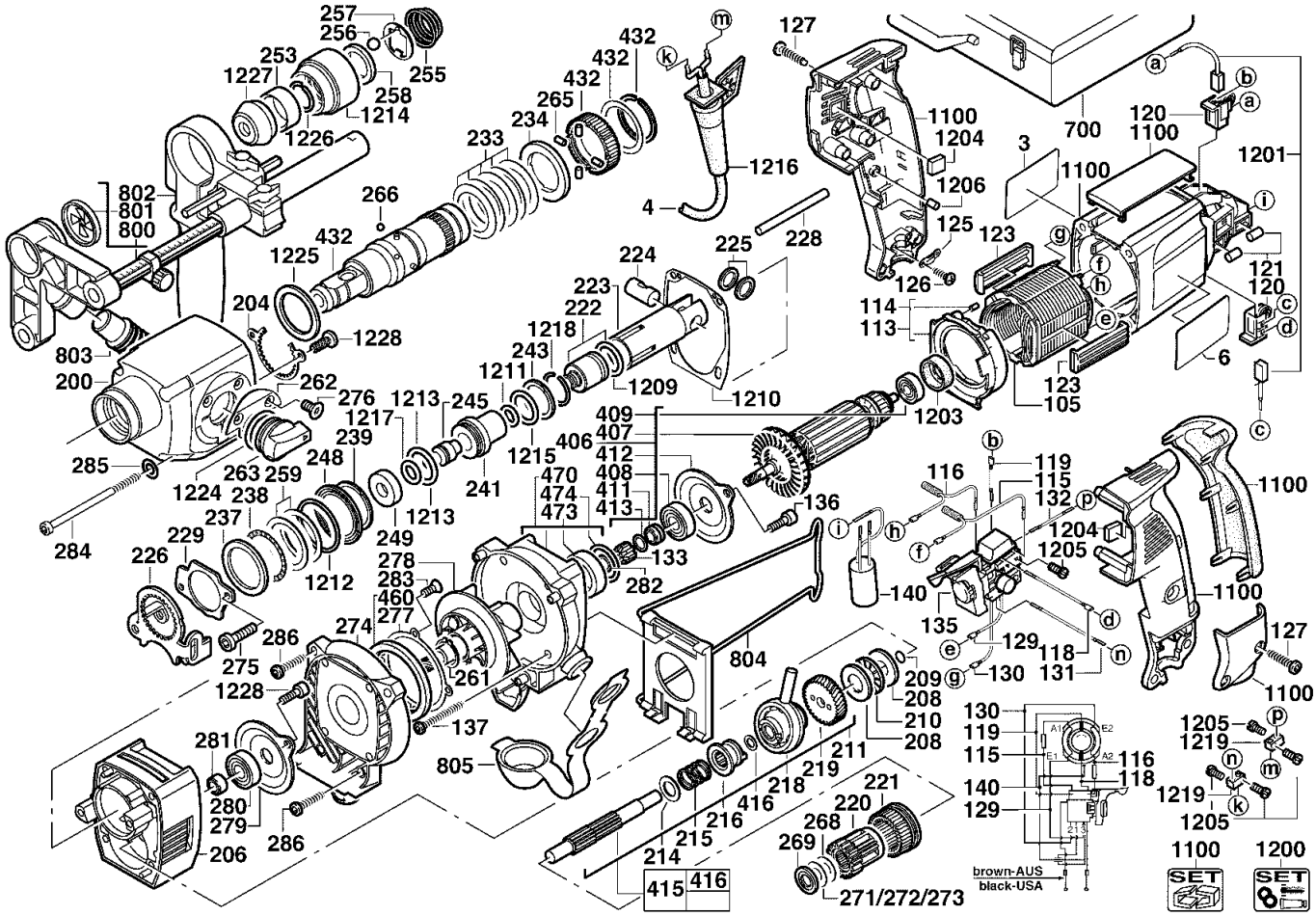

Pos	Index	Quanti	Article No.	Designation
0003	a	1	4931384107	RATING PLATE
0004	a	1	4931623392	CONNECTION CABLE
0006	a	1	4931378806	TYPE PLATE
0105	a	1	4931342802	ELECTRIC FIELD
0113	a	1	4931342794	AIR DEFLECTOR RING
0114	a	4	4931332524	HOLDING-DOWN DEVIC
0115	a	1	4931623121	CHOKING COIL
0116	a	1	4931623122	CHOKING COIL
0118	a	1	4931623125	WIRE
0119	a	1	4931623126	WIRE
0120	a	2	4931382268	BRUSH HOLDER
0121	a	4	4931623123	ROLL
0123	a	2	4931342808	CENTERING LEDGE
0125	a	1	4931256500	CABLE COLLAR
0126	a	2	4931624538	SCREW
0127	a	6	4931618253	SCREW
0129	a	1	4931623127	WIRE
0130	a	1	4931623196	WIRE
0131	a	1	4931622948	WIRE
0132	a	1	4931623136	WIRE
0133	a	1	4931339947	DRIVER
0135	a	1	4931382393	SWITCH BOARD
0136	a	2	4931344513	SCREW
0137	a	4	4931344643	SCREW
0140	a	1	4931276760	CAPACITOR
0200	a	1	4931382394	GEAR BOX
0204	a	1	4931331685	WASHER
0206	a	1	4931382381	BEARING END PLATE
0208	a	2	4931622575	AXIAL BEAR.WASHER
0209	a	1	4931941082	O-RING
0210	a	1	4931622567	AXIAL NEEDLE RING
0211	a	1	4931379284	REDUCT. GEAR SHAFT
0214	a	1	4931621983	DISC
0215	a	1	4931379589	PRESSURE SPRING
0216	a	1	4931379649	COUPLING SLEEVE
0218	a	1	4931379116	WOBBLE DRIVE
0219	a	1	4931387316	REDUCT GEAR WHEEL
0220	a	1	4931384917	PLANET GEAR
0221	a	1	4931331769	INTERN.GEARED WHE
0222	a	1	4931382168	PERCUSSION BODY
0223	a	1	4931379587	CYLINDER
0224	a	1	4931331623	CYLINDRICAL BOLT
0225	a	2	4931400589	WASHER
0226	a	1	4931331752	SLIDER

Repairs/modification and and testing of electric power tools are to be carried out by specialists. The safety regulations according to DIN/VDE/CEE/AFNOR and other regulations valid in the different countries are to be observed.

A & M Electric Tools

Ind	Product No.	Type	Voltage	Country
a	4000384100	PPH26RA	220-240V	IN2

Rotary Hammers

Milwaukee

PPH 26 RA

Exp.view No.	Version	Date	Page
4926 3841 02	0005	02.09.04	2/3

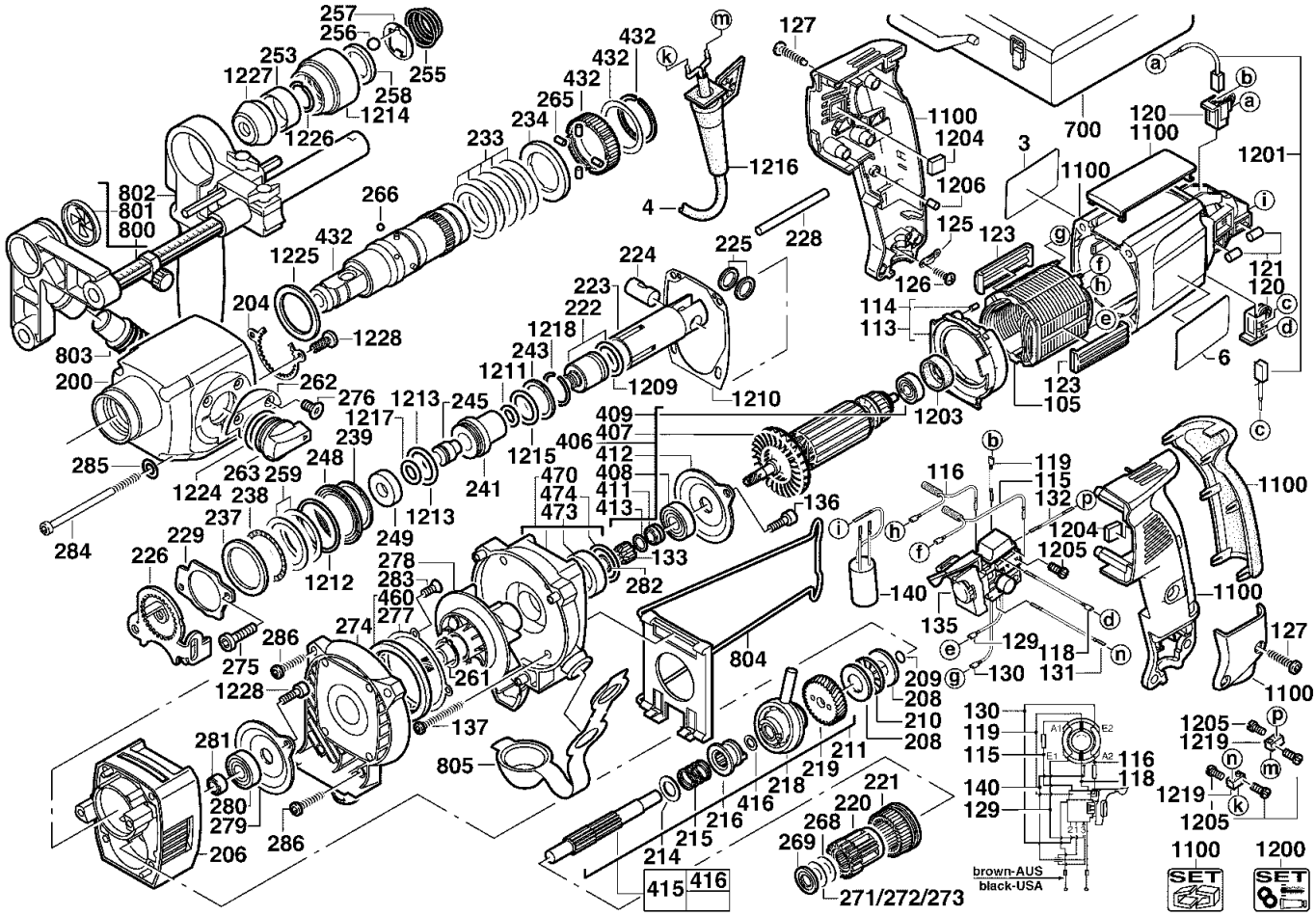

Pos	Index	Quanti	Article No.	Designation
0228	a	1	4931623081	PIN
0229	a	1	4931331787	LATCH PLATE
0233	a	5	4931379071	CUP SPRING
0234	a	1	4931379110	CLUTCH DISC
0237	a	1	4931623199	WASHER
0238	a	1	4931331713	THRUST BEARING
0239	a	1	4931343187	LOCKING WASHER
0241	a	1	4931387331	SLEEVE
0243	a	1	4931387338	THRUST COLLAR
0245	a	1	4931387329	SNAP DIE
0248	a	1	4931343049	WASHER
0249	a	1	4931382274	STOP WASHER
0253	a	1	4931360861	DISTANCE SLEEVE
0255	a	1	4931343128	PRESSURE SPRING
0256	a	1	4931911572	BALL
0257	a	1	4931343127	SUPPORT PLATE
0258	a	1	4931343126	HOLDING RING
0259	a	2	4931623200	WASHER
0261	a	1	4931605142	RING
0262	a	1	4931379108	LATCH PLATE
0263	a	1	4931392506	SWITCH HANDLE
0265	a	4	4931624045	CYLINDER PULLEY
0266	a	4	4931805390	BALL
0268	a	1	4931624096	DISC
0269	a	1	4931379420	SPACER
0271	a	1	4931624098	DISC
0272	a	1	4931624097	DISC
0273	a	1	4931624096	DISC
0274	a	1	4931339942	HOUSING COVER
0275	a	2	4931623260	SCREW
0276	a	2	4931379109	SCREW
0277	a	1	4931347151	FLANGE
0278	a	1	4931347247	SHAFT
0279	a	1	4931267585	BEARING COVER
0280	a	1	4931623188	BALL BEARING
0281	a	1	4931382148	SEALING SLEEVE
0282	a	1	4931343924	HOLDING-DOWN DEVIC
0283	a	4	4931343917	SCREW
0284	a	4	4931623342	SCREW
0285	a	4	4931611245	LOCKING RING
0286	a	4	4931259778	SCREW
0406	a	1	4931344580	ARMATURE
0407	a	1	4931342793	FAN
0408	a	1	4931623188	BALL BEARING

Repairs/modification and and testing of electric power tools are to be carried out by specialists. The safety regulations according to DIN/VDE/CEE/AFNOR and other regulations valid in the different countries are to be observed.

A & M Electric Tools

Ind	Product No.	Type	Voltage	Country
a	4000384100	PPH26RA	220-240V	IN2

Rotary Hammers

Milwaukee

PPH 26 RA

Exp.view No.	Version	Date	Page
4926 3841 02	0005	02.09.04	3/3

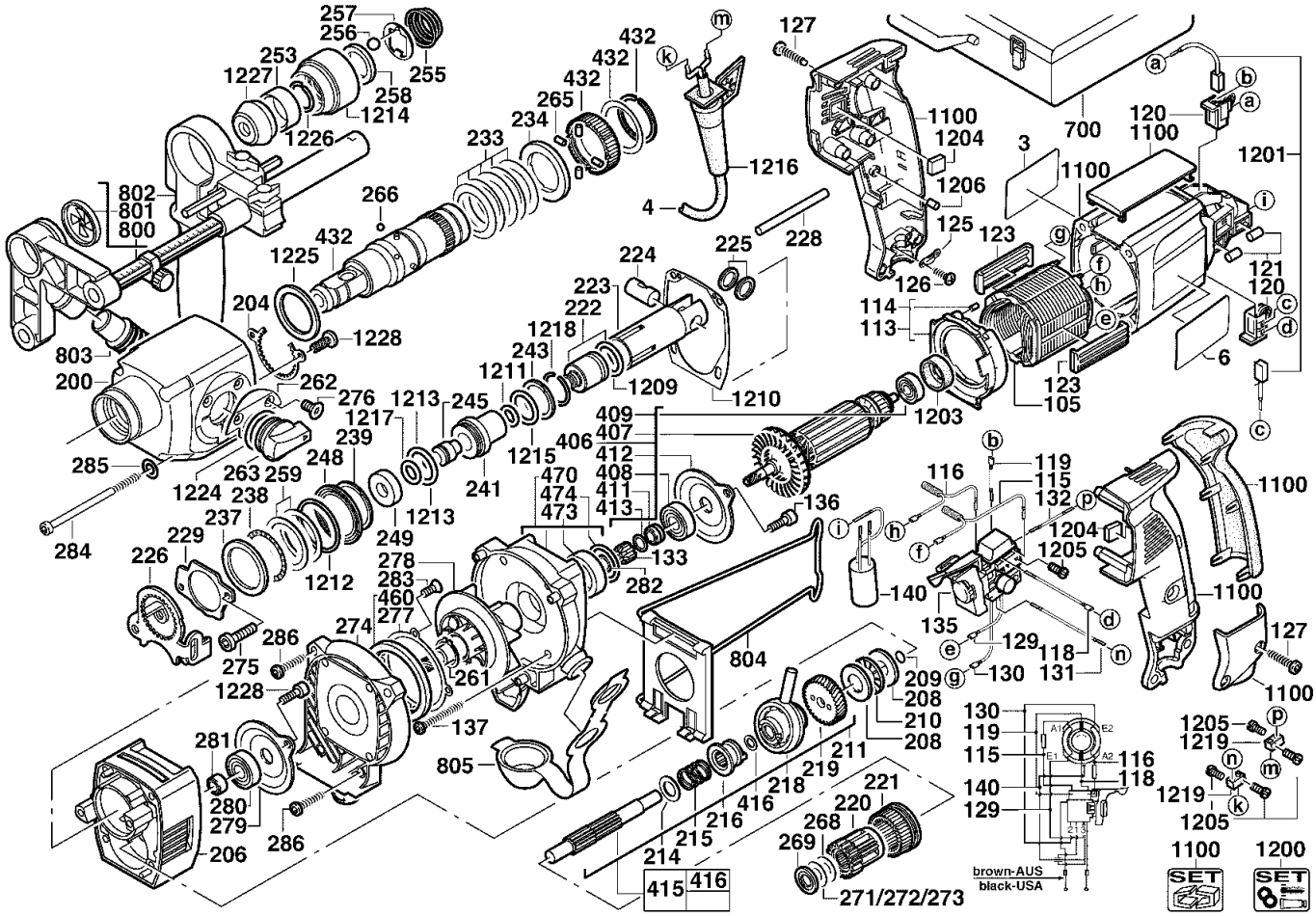

Pos	Index	Quanti	Article No.	Designation
0409	a	1	4931901253	BALL BEARING
0411	a	1	4931344644	SEALING SLEEVE
0412	a	1	4931267585	BEARING COVER
0413	a	1	4931941117	O-RING
0415	a	1	4931384864	REDUCT. GEAR SHAFT
0416	a	1	4931624264	DISC
0432	a	1	4931384934	REPAIR KIT
0460	a	1	4931343867	FELT
0470	a	1	4931343953	HOUSING
0473	a	1	4931339949	BEARING SLEEVE
0474	a	1	4931623124	O-RING
0700	a	1	4932344502	CARRYING CASE
0800	a	1	4931344758	SUCTION DEVICE
0801	a	1	4931347252	RUBBER SLEEVE
0802	a	1	4931344759	HOLDING GRIP
0803	a	1	4931344760	SUCTION HOSE
0804	a	1	4931344998	ACCEPTANCE
0805	a	1	4931344518	COVER CAP
1100	a	1	4931380477	BODY
1200	a	1	4931382195	MAINTENANCE SET
1201	a	1	4931392596	CARBON BRUSH SET
1203	a	1	4931254368	RUBBER SLEEVE
1204	a	2	4931342803	DAMPING ELEMENT
1205	a	6	4931621772	SCREW
1206	a	1	4931271824	HOLDING-DOWN DEVIC
1209	a	1	4931379705	SEAL RING
1210	a	1	4931331735	GASKET
1211	a	1	4931623468	RADIAL SEAL RING
1212	a	1	4931623135	O-RING
1213	a	1	4931623221	RADIAL SEAL RING
1214	a	1	4931343965	SLEEVE
1215	a	1	4931623616	SEAL RING
1216	a	1	4931332161	CABLE ENTRY SLEEVE
1217	a	1	4931624493	SEAL RING
1218	a	1	4931623636	RING
1219	a	2	4931307924	CONNECTOR
1224	a	1	4931623293	O-RING
1225	a	1	4931379585	FELT WASHER
1226	a	1	4931623220	SPRING RING
1227	a	1	4931343123	CAP
1228	a	4	4931379708	SCREW

Repairs/modification and and testing of electric power tools are to be carried out by specialists. The safety regulations according to DIN/VDE/CEE/AFNOR and other regulations valid in the different countries are to be observed.