A & M Electric Tools

Ind	Product No.	Type	Voltage	Country
a	4000384016	PLH30E	220-240V	IN2
b	4000384021	PLH30E	110-120V	GB1
c	4000382835	PLH30E	220-240V	AUS

Rotary Hammers

Milwaukee

PLH 30 E

Exp.view No.	Version	Date	Page
4926 3828 37	0011	20.09.04	1/3

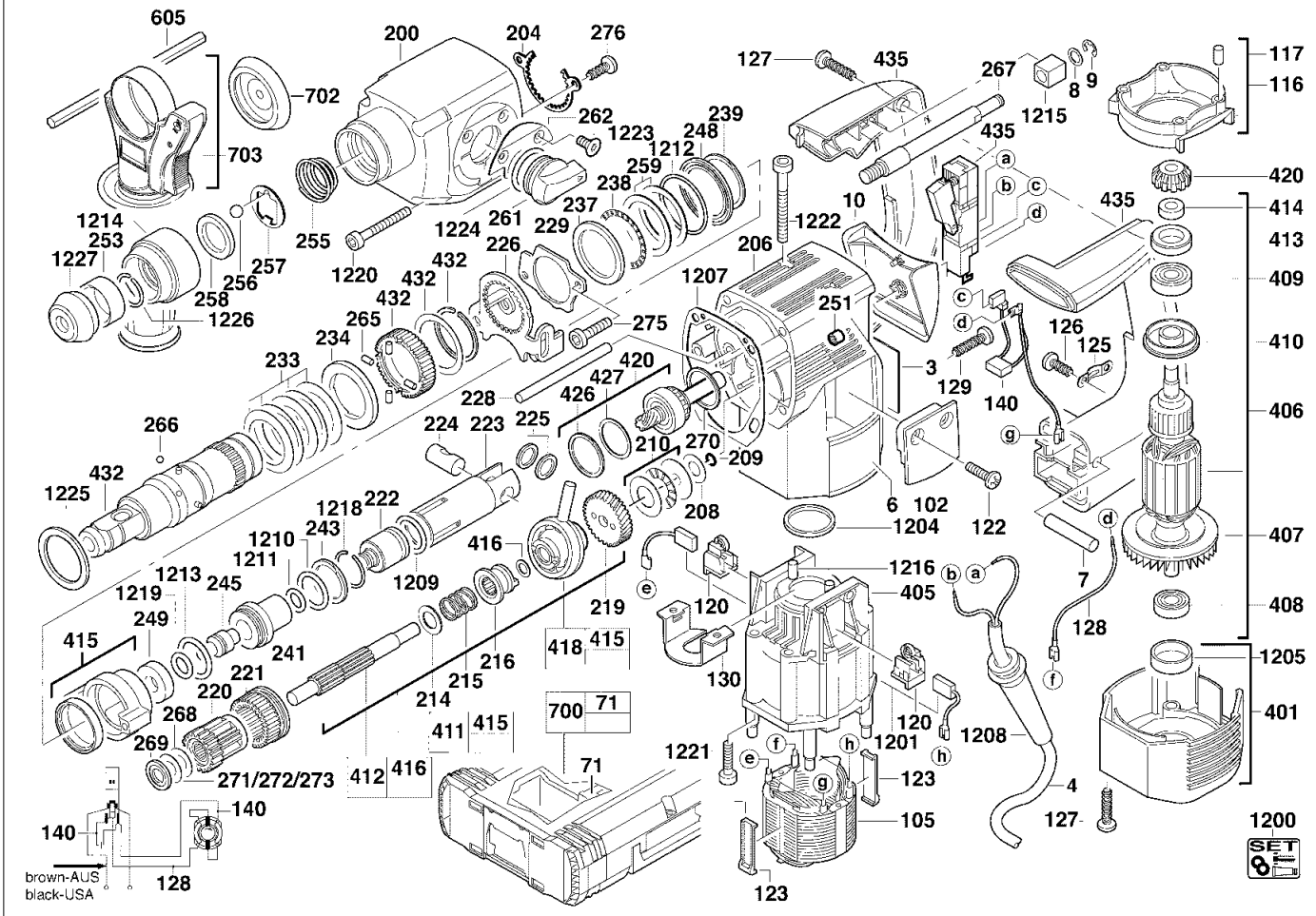

Pos	Index	Quanti	Article No.	Designation
0003	a	1	4931384019	RATING PLATE
0003	.b	1	4931384024	RATING PLATE
0003	..c	1	4931382839	RATING PLATE
0004	a	1	4931250832	CONNECTION CABLE
0004	.b	1	4931623531	CONNECTION CABLE
0004	..c	1	4931624341	CONNECTION CABLE
0006	abc	2	4931382365	NAME PLATE
0007	abc	1	4931623456	GROOVED DOWEL PIN
0008	abc	1	4931623094	WASHER
0009	abc	1	4931621834	WASHER
0010	abc	1	4931360377	GEAR BOX COVER
0071	abc	1	4931379401	INSERT
0102	abc	2	4931360518	PROTECTIVE CAP
0105	a.c	1	4931342802	ELECTRIC FIELD
0105	.b	1	4931343664	ELECTRIC FIELD
0116	abc	1	4931353230	AIR DEFLECTOR RING
0117	abc	4	4931332524	HOLDING-DOWN DEVIC
0120	abc	2	4931382268	BRUSH HOLDER
0122	abc	4	4931624267	SCREW
0123	abc	2	4931342808	CENTERING LEDGE
0125	abc	1	4931256500	CABLE COLLAR
0126	abc	2	4931624516	SCREW
0127	abc	7	4931624515	SCREW
0128	abc	1	4931623541	WIRE
0129	abc	1	4931622153	SCREW
0130	abc	1	4931356869	BEARING COVER
0140	abc	1	4931360833	CAPACITOR
0200	abc	1	4931384040	GEAR BOX
0204	abc	1	4931331685	WASHER
0206	abc	1	4931382948	GEAR BOX
0208	abc	1	4931623637	WASHER
0209	abc	1	4931941082	O-RING
0210	abc	1	4931360041	THRUST BEARING
0214	abc	1	4931621983	DISC
0215	abc	1	4931379589	PRESSURE SPRING
0216	abc	1	4931379649	COUPLING SLEEVE
0219	abc	1	4931379097	REDUCT GEAR WHEEL
0220	abc	1	4931384917	PLANET GEAR
0221	abc	1	4931331769	INTERN.GEARED WHE
0222	abc	1	4931382168	PERCUSSION BODY
0223	abc	1	4931379587	CYLINDER
0224	abc	1	4931331623	CYLINDRICAL BOLT
0225	abc	2	4931400589	WASHER
0226	abc	1	4931331752	SLIDER

Repairs/modification and and testing of electric power tools are to be carried out by specialists. The safety regulations according to DIN/VDE/CEE/AFNOR and other regulations valid in the different countries are to be observed.

A & M Electric Tools

Ind	Product No.	Type	Voltage	Country
a	4000384016	PLH30E	220-240V	IN2
b	4000384021	PLH30E	110-120V	GB1
c	4000382835	PLH30E	220-240V	AUS

Rotary Hammers

Milwaukee

PLH 30 E

Exp.view No.	Version	Date	Page
4926 3828 37	0011	20.09.04	2/3

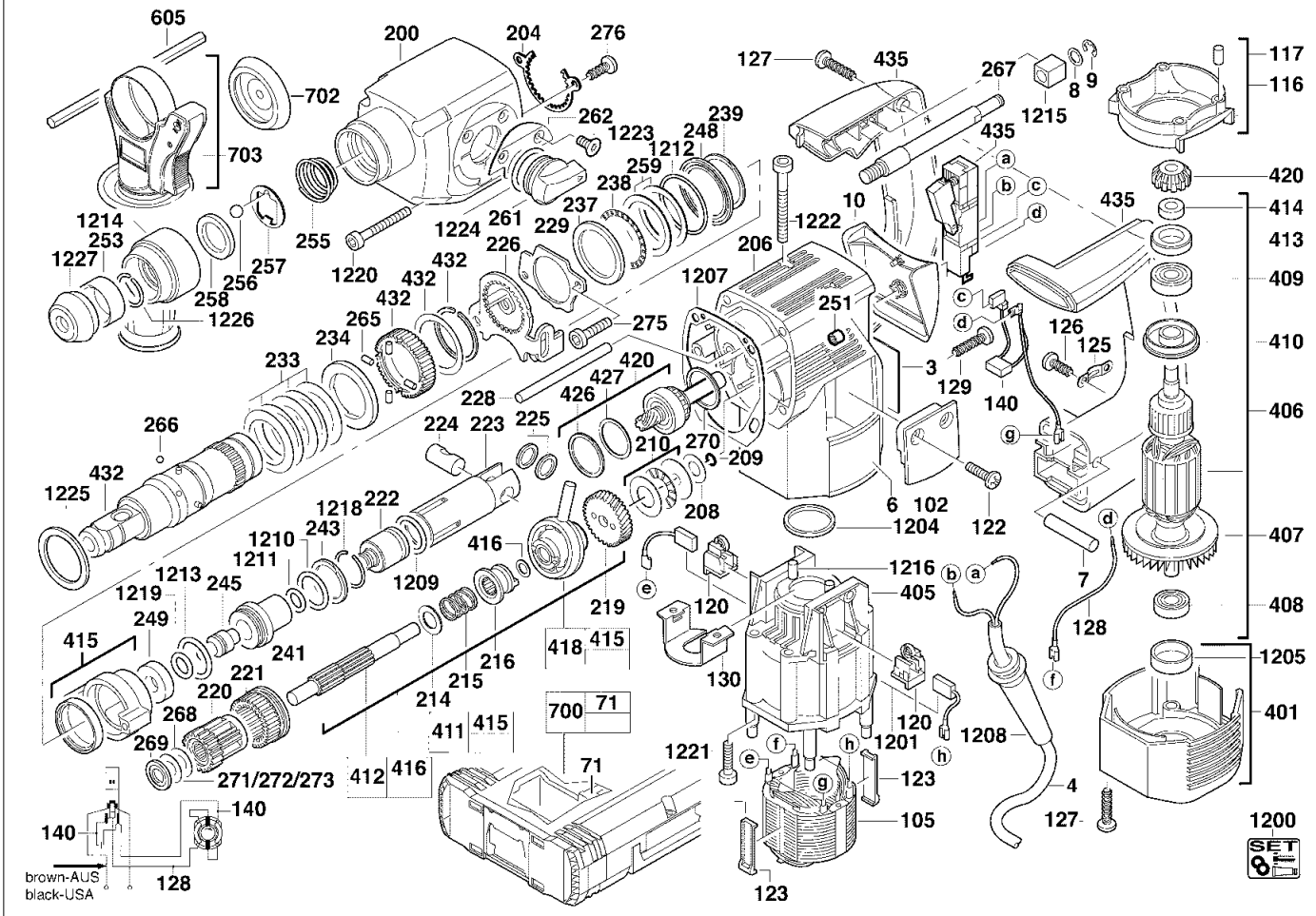

Pos	Index	Quanti	Article No.	Designation
0228	abc	1	4931623081	PIN
0229	abc	1	4931331787	LATCH PLATE
0233	abc	5	4931379071	CUP SPRING
0234	abc	1	4931379110	CLUTCH DISC
0237	abc	1	4931623199	WASHER
0238	abc	1	4931331713	THRUST BEARING
0239	abc	1	4931343187	LOCKING WASHER
0241	abc	1	4931387331	SLEEVE
0243	abc	1	4931387338	THRUST COLLAR
0245	abc	1	4931387329	SNAP DIE
0248	abc	1	4931343049	WASHER
0249	abc	1	4931382274	STOP WASHER
0251	abc	2	4931219424	NEEDLE BEARING
0253	abc	1	4931360861	DISTANCE SLEEVE
0255	abc	1	4931343128	PRESSURE SPRING
0256	abc	1	4931911572	BALL
0257	abc	1	4931343127	SUPPORT PLATE
0258	abc	1	4931343126	HOLDING RING
0259	abc	2	4931623200	WASHER
0261	abc	1	4931392506	SWITCH HANDLE
0262	abc	1	4931379108	LATCH PLATE
0265	abc	4	4931624045	CYLINDER PULLEY

Pos	Index	Quanti	Article No.	Designation
0266	abc	4	4931805390	BALL
0267	abc	1	4931400216	REPAIR KIT
0268	abc	1	4931624096	DISC
0269	abc	1	4931379420	SPACER
0270	abc	1	4931360013	RING
0271	abc	1	4931624098	DISC
0272	abc	1	4931624097	DISC
0273	abc	1	4931624096	DISC
0275	abc	2	4931623602	SCREW
0276	abc	2	4931379708	SCREW
0401	abc	1	4931360732	MOTOR COVER
0405	abc	1	4931384337	MOTOR HOUSING
0406	a.c	1	4931360413	ARMATURE
0406	.b	1	4931356834	ARMATURE
0407	abc	1	4931342793	FAN
0408	abc	1	4931341740	GROOVED BALL BEAR.
0409	abc	1	4931624101	BALL BEARING
0410	abc	1	4931353260	INSULATING DISC
0411	abc	1	4931384561	REPAIR KIT
0412	abc	1	4931384864	REDUCT. GEAR SHAFT
0413	abc	1	4931356522	SLEEVE
0414	abc	1	4931353238	SPACER

Repairs/modification and and testing of electric power tools are to be carried out by specialists. The safety regulations according to DIN/VDE/CEE/AFNOR and other regulations valid in the different countries are to be observed.

A & M Electric Tools

Ind	Product No.	Type	Voltage	Country
a	4000384016	PLH30E	220-240V	IN2
b	4000384021	PLH30E	110-120V	GB1
c	4000382835	PLH30E	220-240V	AUS

Rotary Hammers

Milwaukee

PLH 30 E

Exp.view No.	Version	Date	Page
4926 3828 37	0011	20.09.04	3/3

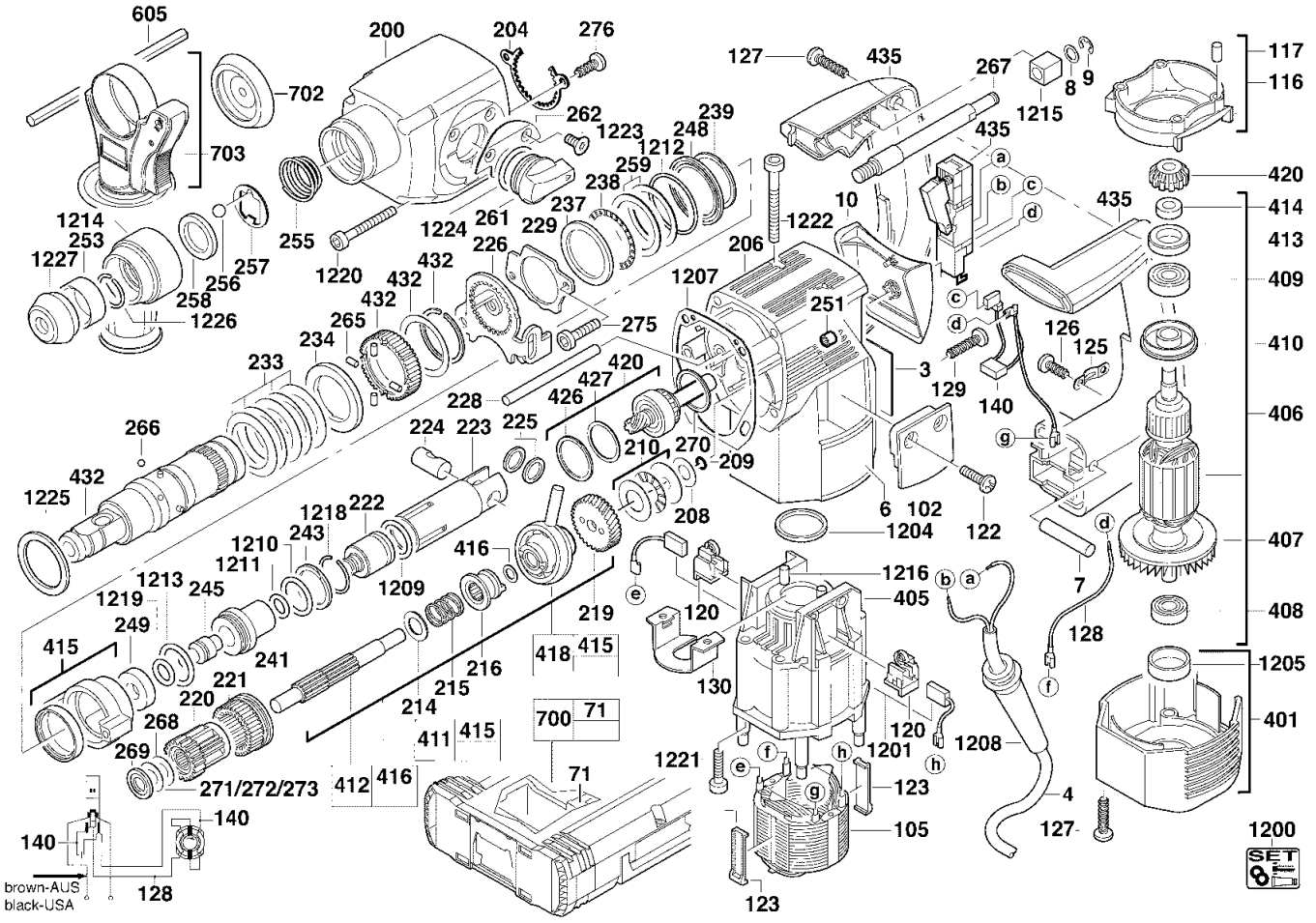

Pos	Index	Quanti	Article No.	Designation
0415	abc	1	4931384557	BUSHING
0416	abc	1	4931624264	DISC
0418	abc	1	4931384560	REPAIR KIT
0420	abc	1	4931379098	PINION SHAFT
0426	abc	1	4931616614	LOCKING RING
0427	abc	1	4931622564	DISC
0432	abc	1	4931384934	REPAIR KIT
0435	abc	1	4931384900	REPAIR KIT
0605	abc	1	4931384434	DEPTH GAUGE
0700	abc	1	4932378986	CARRYING CASE
0702	abc	1	4932265320	DUST CATCHER
0703	abc	1	4932373725	HANDLE
1200	a.c	1	4931379129	MAINTENANCE SET
1200	.b	1	4931379378	MAINTENANCE SET
1201	a.c	1	4931369477	CARBON BRUSH SET
1201	.b	1	4931392592	CARBON BRUSH SET
1204	abc	1	4931623124	O-RING
1205	abc	1	4931360781	RUBBER SLEEVE
1207	abc	1	4931331735	GASKET
1208	abc	1	4931307027	CABLE ENTRY SLEEVE
1209	abc	1	4931379705	SEAL RING
1210	abc	1	4931623616	SEAL RING
1211	abc	1	4931623468	RADIAL SEAL RING
1212	abc	1	4931623135	O-RING
1213	abc	1	4931623221	RADIAL SEAL RING
1214	abc	1	4931343965	SLEEVE
1215	abc	1	4931392502	DAMPING ELEMENT
1216	abc	2	4931331549	HOLDING-DOWN DEVIC
1218	abc	1	4931623636	RING
1219	abc	1	4931624493	SEAL RING
1220	abc	4	4931623521	SCREW
1221	abc	4	4931623520	SCREW
1222	abc	2	4931623519	SCREW
1223	abc	2	4931379109	SCREW
1224	abc	1	4931623293	O-RING
1225	abc	1	4931379585	FELT WASHER
1226	abc	1	4931623220	SPRING RING
1227	abc	1	4931343123	CAP

Repairs/modification and and testing of electric power tools are to be carried out by specialists. The safety regulations according to DIN/VDE/CEE/AFNOR and other regulations valid in the different countries are to be observed.