A & M Electric Tools

Ind	Product No.	Type	Voltage	Country
a	4000400383	V18HX	18V	***

Ind	Product No.	Type	Voltage	Country

Battery Tools

Milwaukee

V 18 HX

Exp.view No.	Version	Date	Page
4926 4003 87	0004	20.11.07	1/3

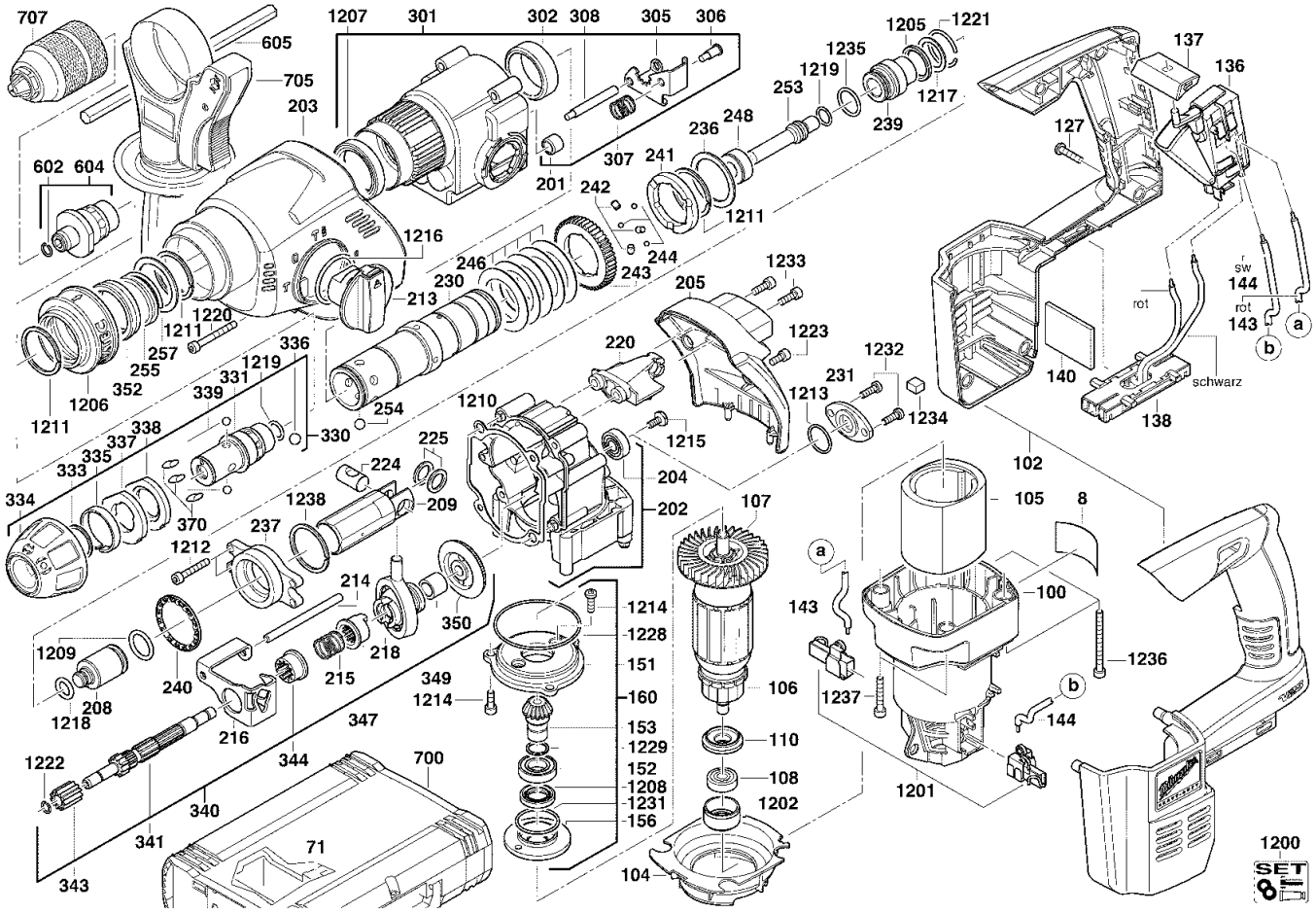

Pos	Index	Quanti	Article No.	Designation
0008	a	1	4931400389	RATING PLATE
0071	a	1	4931392424	INSERT
0100	a	1	4931392710	MOTOR HOUSING
0102	a	1	4931400392	HANDLE COMPL.
0104	a	1	4931392727	AIR DEFLECTOR RING
0105	a	1	4931392390	HOUSING
0106	a	1	4931400393	ARMATURE
0107	a	1	4931342793	FAN
0108	a	1	4931623951	BALL BEARING
0110	a	1	4931392383	INSULATING DISC
0127	a	7	4931624515	SCREW
0136	a	1	4931400353	SWITCH BOARD
0137	a	1	4931392715	LEVER
0138	a	1	4931400397	WIRE
0140	a	1	4931400568	RUBBER PLATE
0143	a	1	4931624356	WIRE
0144	a	1	4931624357	WIRE
0151	a	1	4931384626	BEARING END PLATE
0152	a	1	4931624278	BALL BEARING
0153	a	1	4931392419	PINION
0156	a	1	4931392742	BEARING COVER
0160	a	1	4931392418	BEARING END PLATE

Pos	Index	Quanti	Article No.	Designation
0201	a	1	4931933756	NEEDLE BEARING
0202	a	1	4931392739	GEAR BOX
0203	a	1	4931392716	GEAR BOX INSULATIO
0204	a	1	4931623951	BALL BEARING
0205	a	1	4931392717	GEAR COVER
0208	a	1	4931392376	PERCUSSION BODY
0209	a	1	4931392472	CYLINDER
0213	a	1	4931384621	SWITCH HANDLE
0214	a	1	4931624279	CYLINDER PIN
0215	a	1	4931365058	SPRING
0216	a	1	4931384617	SLIDING SWITCH
0218	a	1	4931365013	WOBBLE DRIVE
0220	a	1	4931392728	HOLDING DEVICE
0224	a	1	4931365056	CYLINDRICAL BOLT
0225	a	2	4931365112	DISC
0230	a	1	4931392735	SPINDEL GEAR SLEEV
0231	a	1	4931392461	BEARING COVER
0236	a	1	4931624426	WASHER
0237	a	1	4931392737	ENDPLATE
0239	a	1	4931384608	SLEEVE
0240	a	1	4931392736	SPINDLE BEARING
0241	a	1	4931392751	CLUTCH DISC

Repairs/modification and and testing of electric power tools are to be carried out by specialists. The safety regulations according to DIN/VDE/CEE/AFNOR and other regulations valid in the different countries are to be observed.

A & M Electric Tools

Ind	Product No.	Type	Voltage	Country
a	4000400383	V18HX	18V	***

Ind	Product No.	Type	Voltage	Country

Battery Tools

Milwaukee

V 18 HX

Exp.view No.	Version	Date	Page
4926 4003 87	**0004**	**20.11.07**	**2/3**

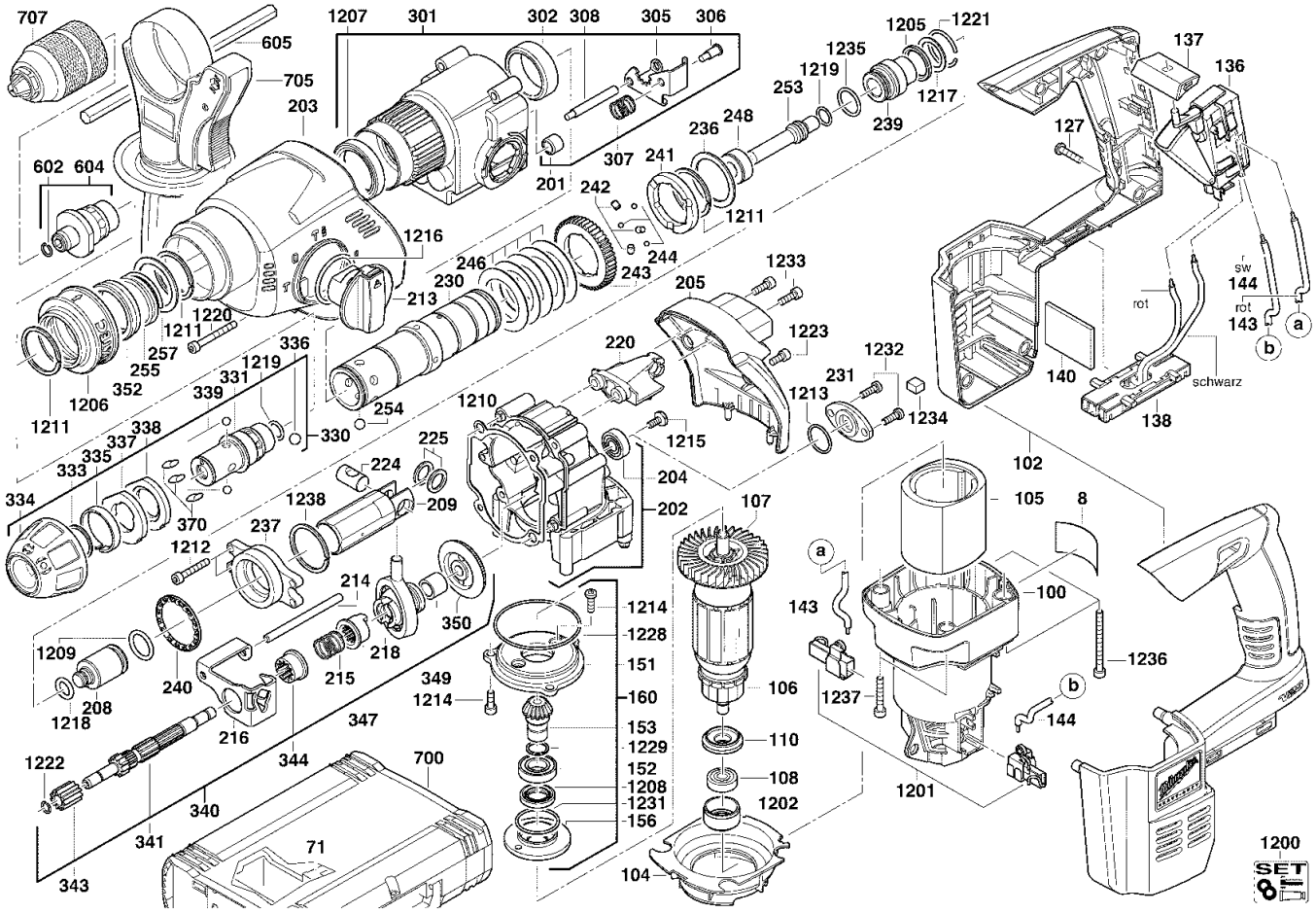

Pos	Index	Quanti	Article No.	Designation
0242	a	3	4931365057	CYLINDRICAL BOLT
0243	a	1	4931392489	SPINDLE GEAR
0244	a	3	4931944281	BALL
0246	a	5	4931365066	CUP SPRING
0248	a	1	4931384607	STOP WASHER
0253	a	1	4931384605	SNAP DIE
0254	a	6	4931805437	BALL
0255	a	1	4931331754	PRESSURE SPRING
0257	a	1	4931624257	WASHER
0301	a	1	4931392741	GEAR BOX
0302	a	1	4931621944	NEEDLE BEARING
0305	a	1	4931384618	LOCKING PLATE
0306	a	1	4931384619	GUIDE BOLT
0307	a	1	4931384631	PRESSURE SPRING
0308	a	1	4931384690	GUIDE BOLT
0330	a	1	4931384684	ADAPTER
0331	a	1	4931392451	ADAPTER
0333	a	1	4931622874	SPRING RING
0334	a	1	4931384681	SET SLEEVE
0335	a	1	4931321064	SPRING
0336	a	1	4931911572	BALL
0337	a	1	4931343034	JUMPER RING

Pos	Index	Quanti	Article No.	Designation
0338	a	1	4931343057	SPACER
0339	a	2	4931805413	BALL
0340	a	1	4931392410	REDUCTION GEAR
0341	a	1	4931384610	REDUCT. GEAR SHAFT
0343	a	1	4931384611	GEAR
0344	a	1	4931375874	INTERN.GEARED WHE
0347	a	1	4931384691	COUPLING SLEEVE
0349	a	1	4931384613	DISTANCE SLEEVE
0350	a	1	4931392411	BEVEL GEAR
0352	a	1	4931392450	RING STOP
0370	a	3	4931396400	HOLDING-DOWN DEVIC
0602	a	1	4931302074	SPRING
0604	a	1	4931392452	CHUCK ADAPTER
0605	a	1	4931384434	DEPTH GAUGE
0700	a	1	4932383162	CARRYING CASE
0705	a	1	4931392747	HANDLE
0707	a	1	4932376531	QUICK ACTION CHUCK
1200	a	1	4931392428	MAINTENANCE SET
1201	a	1	4931392429	CARBON BRUSH SET
1202	a	1	4931351729	RUBBER SLEEVE
1205	a	1	4931624391	SEAL RING
1206	a	1	4931392746	SLEEVE

Repairs/modification and and testing of electric power tools are to be carried out by specialists. The safety regulations according to DIN/VDE/CEE/AFNOR and other regulations valid in the different countries are to be observed.

A & M Electric Tools

Ind	Product No.	Type	Voltage	Country
a	4000400383	V18HX	18V	***

Ind	Product No.	Type	Voltage	Country

Battery Tools

Milwaukee

V 18 HX

Exp.view No.	Version	Date	Page
4926 4003 87	**0004**	**20.11.07**	**3/3**

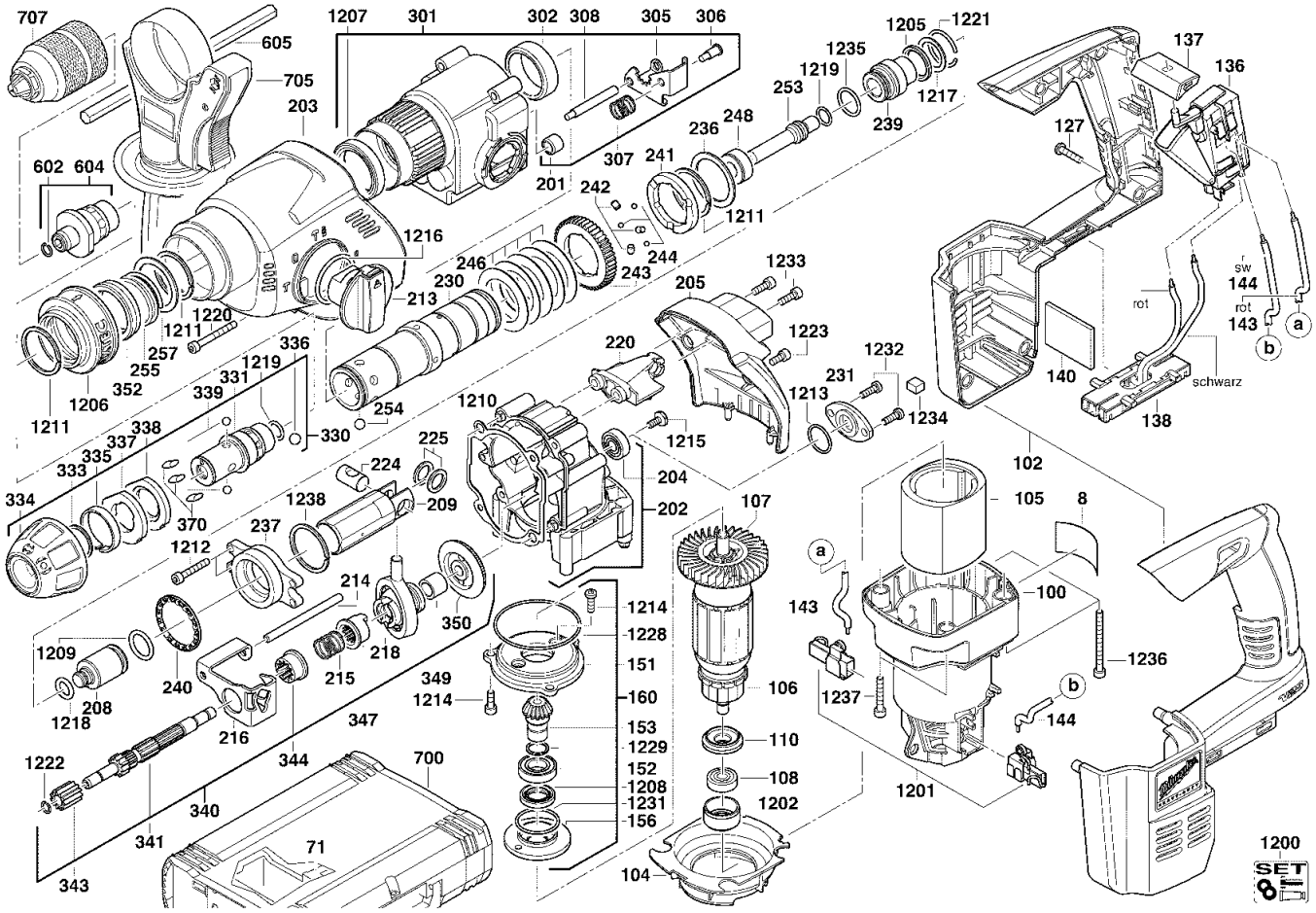

Pos	Index	Quanti	Article No.	Designation
1207	a	1	4931624430	SEAL RING
1208	a	1	4931624429	SEAL RING
1209	a	1	4931624533	SEAL RING
1210	a	1	4931375894	SEAL
1211	a	3	4931945764	SPRING RING
1212	a	4	4931624425	SCREW
1213	a	1	4931623912	SEAL RING
1214	a	5	4931267225	SCREW
1215	a	1	4931375897	SCREW
1216	a	1	4931624353	SEAL RING
1217	a	1	4931392464	THRUST COLLAR
1218	a	1	4931387380	O-RING
1219	a	2	4931624493	SEAL RING
1220	a	4	4931623521	SCREW
1221	a	1	4931623860	SPRING RING
1222	a	1	4931624260	SPRING RING
1223	a	2	4931621741	SCREW
1228	a	1	4931623198	O-RING
1229	a	1	4931622084	SPRING RING
1231	a	1	4931624351	SEAL RING
1232	a	2	4931621743	SCREW
1233	a	2	4931622315	SCREW
1234	a	1	4931375508	FELT
1235	a	1	4931624381	O-RING
1236	a	2	4931624409	SCREW
1237	a	2	4931623886	SCREW
1238	a	1	4931624383	SPRING RING

Repairs/modification and and testing of electric power tools are to be carried out by specialists. The safety regulations according to DIN/VDE/CEE/AFNOR and other regulations valid in the different countries are to be observed.