A & M Electric Tools

Ind	Product No.	Type	Voltage	Country
a	4000389415	PES18T	18V	***
b	4000389415	PES18T	18V	***
c	4000389415	PES18T	18V	***
d	4000389415	PES18T	18V	***
e	4000401493	PES18T	18V	***

Battery Tools

Milwaukee

PES 18 T

Exp.view No.	Version	Date	Page
4926 3894 17	0004	04.10.06	1/1

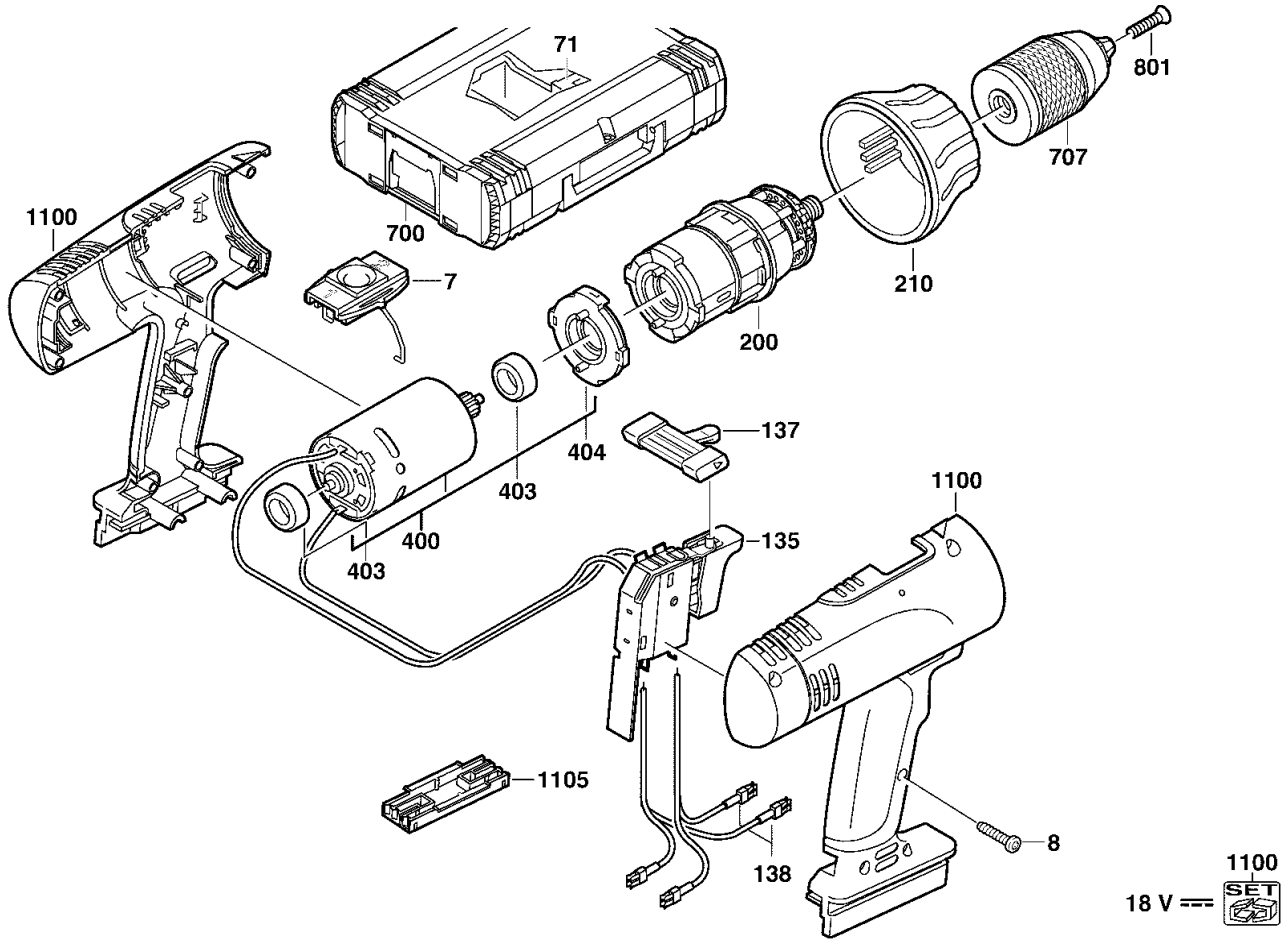

Pos	Index	Quanti	Article No.	Designation
0007	abcde.....	1	4931363810	SLIDING SWITCH
0008	abcde.....	7	4931622708	SCREW
0071	abcde.....	1	4931390334	INSERT
0135	abcde.....	1	4931400348	SWITCH BOARD
0137	abcde.....	1	4931363944	SWITCH
0138	abcde.....	1	4931363820	CABLE
0200	abcd.....	1	4931363980	GEAR BOX
0200	....e.....	1	4931386876	GEAR BOX
0210	abcd.....	1	4931363933	JUMPER RING
0210	....e.....	1	4931389627	JUMPER RING
0400	abcd.....	1	4931363954	MOTOR
0400	....e.....	1	4931401495	MOTOR
0403	abcde.....	2	4931363798	RUBBER SLEEVE
0404	abcd.....	1	4931363799	BEARING END PLATE
0404	....e.....	1	4931389503	BEARING END PLATE
0700	abcde.....	1	4932378986	CARRYING CASE
0707	abcd.....	1	4932376533	QUICK ACTION CHUCK
0707	....e.....	1	4932371913	QUICK ACTION CHUCK
0801	abcd.....	1	4931400026	LOCKING SCREW
0801	....e.....	1	4931401643	LOCKING SCREW
1100	abcde.....	1	4931363960	HOUSING
1105	abcde.....	1	4931363797	INSERT

Pos	Index	Quanti	Article No.	Designation

Repairs/modification and and testing of electric power tools are to be carried out by specialists. The safety regulations according to DIN/VDE/CEE/AFNOR and other regulations valid in the different countries are to be observed.